FMX-IM-3UR38X
Processor Unit – For the Connection of FCS/FCI Product Series Ex Flow Sensors (NAEX)
IO-Link Device with Relay Switching Outputs

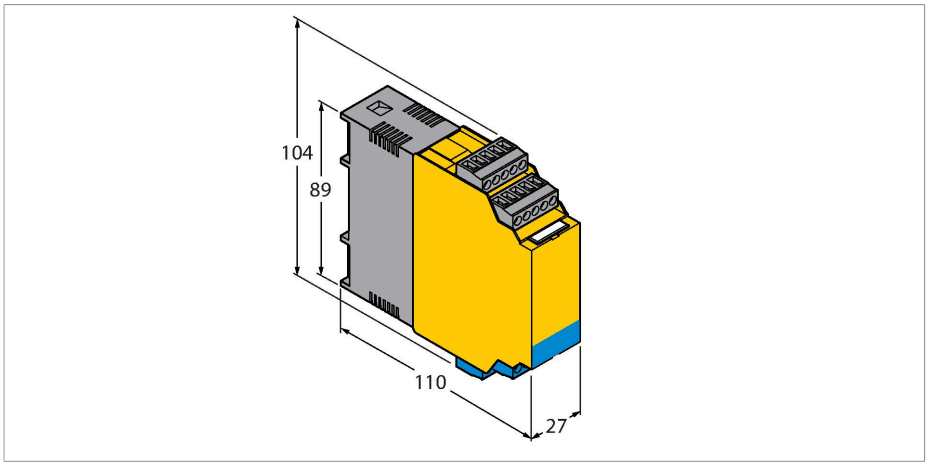

Technical data

Type	FMX-IM-3UR38X
ID	7525103
Electrical data	
Operating voltage U_B	20…250 VAC
Frequency	40…70 Hz
Operating voltage U_B	20…125 VDC
Power consumption	< 4 W
No-load current I_0	≤ 63 mA
Teach modes	QuickTeach; min/max adjustment. Teach modes incl. DeltaFlow monitoring (teach modes are automatically released with the change of flow speed).
Flow speed	[%] after min/max adjustment (permanent)
Flow speed	% after Quick-Teach (permanent)
Medium temperature	[°C] with the SET button temporarily pressed
Repeatability flow rate	typical ± 1 % (of full scale)
Repeatability media temperature	typical ± 1 K
Measuring accuracy media temperature	typical ± 7 K
Switchpoint hysteresis media temperature	2 K
Input function	Connection of flow sensors (Ex sensors of the FCS/FCI product series only!)
Sensor voltage	≤ 7 VDC
Sensor current	≤ 70 mA

Features

- For Ex ia resp. Ex ib sensors
- Relay output for flow, temperature and faults
- Adjustment of switchpoint, no teaching of flow boundaries (QuickTeach)
- LED band for indication of flow speed and media temperature
- Monitoring of operating and display range
- Detection of wire-break and short-circuit on the sensor side
- Standard IO or IO-Link operating mode
- Parametrized via pushbutton or software-supported via IO-Link
- Associated equipment [Ex ia Ga/Da]
- Connection of flow probes Zone 0/20

Functional principle

All Ex flow sensors from the FCS series (immersion sensors) and FCI series (inline sensors) can be operated with the FMX-IM external processing unit.

The flow module features four status LEDs as well as a 10-segment LED band for local monitoring. Software-based diagnostic options are also available to the user, such as wire-break and short-circuit on the sensor side. Furthermore, monitoring of flow rates and media temperatures within a predefined operating and display range.

The upper and lower limits of the flow range are taught in using the max./min. teach mode implemented. The flow switchpoint is easily adjusted by means of the Quick-Teach function, without having to program a lower and upper limit of the flow range. Working on the calorimetric principle, the connectible sensors not only detect the flow rate but also the media temperature.

FMX-IM-3UR38X| 22-08-2024 08-00 | Technical modifications reserved

Technical data

Sensor current limitation	approx. 110 mA
Measuring frequency	5 Hz (every 200 ms with software filter)
Output functions	
Flow monitoring	relay output
Temperature monitoring	relay output
Error monitoring	relay output
Switching characteristic	NO/NC
Switching state	NO/NC parametrizable (relay output error monitoring only NC)
Switching voltage	< 250 VAC / 60 VDC
Switching current	< 2 A
Switching capacity	< 500 VA / 60 W
Switching frequency	≤ 10 Hz
Electrical connections	5-pole removable reverse polarity protected terminal blocks
Connection mode	screw connection
Terminal cross-section	≥ 1.5…≤ 2.5 mm²
IO-Link	
IO-Link specification	V 1.0
Transmission rate	38.4 kBit/s (COM 2)
Transmission physics	Transmission physics 3-wire physics (PHY 2)
Communication channel	Jack plug COM (PC)
Communication modes	Tool based engineering via FDT / DTM, IODD. Acyclic communication via On-Request Data Objects
Included in the SIDI GSDML	Yes
Tests/approvals	
Device marking	Ex II (1) G [Ex ia Ga] IIC resp. II (1) D [Ex ia Da] IIIC
EX type-examination certificate	TÜV 11 ATEX 078981
IECEx certificate of conformity	IECEx TUN 11.0005
Declaration of conformity EN ISO/IEC	5108M
Approvals	CE, C-UL U.S. submitted
Electromagnetic compatibility (EMC)	Acc. to NE21
Relative humidity	EN 60068-2-38
Mechanical data	
Design	Signal processor
Dimensions	89 x 110 x 27 mm
Housing material	Plastic, Polycarbonate/ABS
Ambient temperature	-25…+70 °C
Mounting type	DIN rail mounting and mounting panel
Protection class	IP20

The flow module can be operated either in IO-Link (IOL) or in standard IO (SIO) mode via the integrated IO-Link interface. In SIO mode, the switching outputs are operated in the standard way. In IOL mode the current process signal is transmitted cyclically as a 10 bit-serial value.

Parametrization is initiated either via pushbutton or software-supported via IO-Link interface. The actual parametrization is then implemented via the tool-based DTM or IODD within the FDT frame PACTware™ or acyclically near the control via On-Request Data Objects (ORDO).

FMX-IM-3UR38X| 22-08-2024 08-00 | Technical modifications reserved

Technical data

MTBF	115 Years

FMX-IM-3UR38X| 22-08-2024 08-00 | Technical modifications reserved

LED display

LED	Color	Status	Description
Pwr	green	on	Operating voltage applied Device ready for operation
		flashing	Operating voltage applied IO-Link communication active (inverted flash with T on 900 ms and T off 100 ms)
Flow	yellow	off	Switching output flow [low]
		on	Switching output flow [high]
		flashing	Teach mode / display of diagnostic data for specification see manual
Temp	yellow	off	Switching output media temperature [low]
		on	Switching output media temperature [high]
		flashing	Teach mode / display of diagnostic data for specification see manual
Fault	Red	Off	Switching output fault [high]
		On	Switching output flow [low] (for error pattern in combination with LEDs see manual)

For detailed description of the display patterns and flashing codes see instruction manual FM-IM/FMX-IM

IO-Link (Process Data Objects)

Bit	15	14	13	12	11	10	9	8	7	6	5	4	3	2	1	0
	Flow Value 10 Bit (Bit 15 = MSB, Bit 6 = LSB)										not assigned			Out 3 (Fault)	Out 2 (Temp)	Out1 (Flow)

Accessories

Dimension drawing	Type	ID	
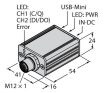	USB-2-IOL-0002	6825482	IO-Link Master with integrated USB port
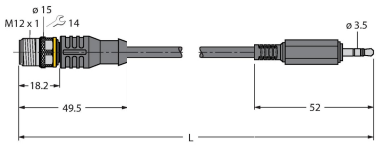	IOL-COM/3M	7525110	IO-Link communication line for connecting IO-Link devices to an IO-link master via a 3.5-mm jack plug

Accessories

Dimension drawing	Type	ID	
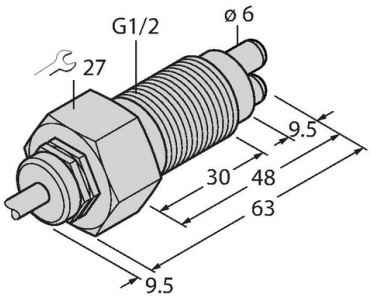	FCS-GL1/2A4-NAEX/A	6870440	Ex flow sensor according to category II 2 G for gaseous media

FMX-IM-3UR38X| 22-08-2024 08-00 | Technical modifications reserved

Dimension drawing	Type	ID	
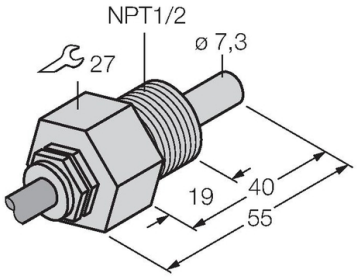	FCS-N1/2A4-NAEX0	6870471	Ex flow sensor according to category II 1 G for liquid media
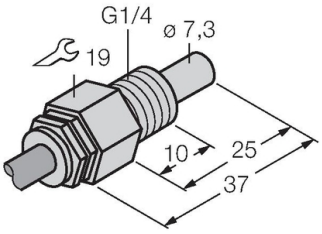	FCS-G1/4A4-NAEX0	6870465	Ex flow sensor according to category II 1 G for liquid media
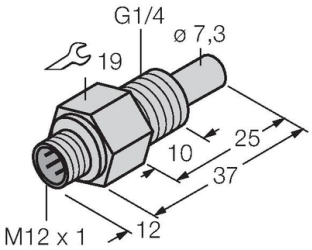	FCS-G1/4A4-NAEX-H1141	6870341	Ex flow sensor according to category II 2 G for liquid media
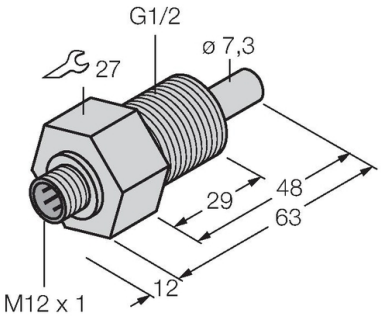	FCS-GL1/2A4-NAEX-H1141	6870432	Ex flow sensor according to category II 2 G for liquid media

Dimension drawing	Type	ID	
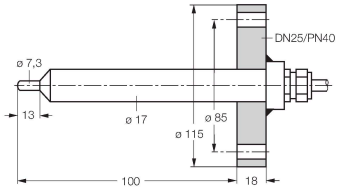	FCS-DN25A4-NAEX0/L100	6872035	Ex flow sensor according to category II 1 G for liquid media

Instructions for use

Intended use

This device fulfills the directive 2014/34/EC and can be applied in explosion hazardous areas according to EN60079-0, EN60079-11 and EN61241-11 as associated equipment for connection to intrinsically safe flow sensors.In order to ensure that the device is operated as intended, the national regulations and directives must be observed.

For use in explosion hazardous areas conform to classification

II (1) G and II (1) D (Group II, Category (1) G, electrical equipment for gas-atmospheres and category (1) D, electrical equipment for dust atmospheres)

Marking (see device or technical data sheet)

Ex II (1) G [Ex ia Ga] IIC T4 acc. to EN60079-11 and EN60079-0/61241-11 and Ex II (1) D [Ex ia Da] IIIC
Ex II 1 G and EEx ia IIC T4 acc. to EN50020 and EN50284 and Ex II 1 D IP67 T 115 °C acc. to EN50281-1-1

Local admissible ambient temperature

-25…+70 °C

Installation/Commissioning

These devices may only be installed, connected and operated by trained and qualified staff. Qualified staff must have knowledge of protection classes, directives and regulations concerning electrical equipment designed for use in explosion hazardous areas.Please verify that the classification and the marking on the device comply with the actual application conditions.

This device is accessory equipment which features intrinsically safe circuits as well as non-intrinsically safe circuits. It may only be installed outside the explosion hazardous area in dry, clean and well monitored areas. If a declaration of conformity or declaration of the manufacturer as a category 3 device exists, the device may be installed in zone 2. Special conditions for safe operation must be observed. Intrinsically-safe electrical equipment can be connected to the intrinsically-safe connections. All equipment must comply with the demands for operation in the existing zone of the explosion hazardous area. If the intrinsically safe circuits lead to the dust explosion hazardous zones 20 or 21, it is important to ensure that the devices connected to this circuit fulfil the demands for category 1D or 2D and are certified accordingly. If the equipment is interconnected, it is necessary to perform the "Proof of intrinsic safety" (EN 60079-14). Equipment which has been used once to connect intrinsically safe circuits to non-intrinsically safe circuits is no longer suitable for subsequent use with intrinsically safe circuits. Relevant regulations exist for the establishment of intrinsically-safe circuits, mounting of external connection parts as well as the characteristics and laying of cables. Cables and terminals with intrinsically-safe circuits must be marked. They should be separated from non-intrinsically safe circuits or must feature appropriate insulation (EN 60079-14). Observe the prescribed clearances to earthed components and connections of other devices to the intrinsically-safe connections of this device. Unless expressed specifically in the device-specific operating instructions, the approval becomes void if the device is opened, repaired or actions are performed on the device by someone other than approved experts or the manufacturer. Visible changes to the device housing, such as brown-black discolourations caused by heat, as well as holes or bulges also indicate a serious danger. Switch off the device immediately. With the associated electrical equipment the interconnected intrinsically-safe equipment must also be checked. Inspection of a device with regard to the explosion protection can only be performed by an expert or the manufacturer. The operation of the devices is only permitted in conjunction with the permitted data printed on the side of the housing. Before any commissioning or modification of the device interconnections, ensure that the respective regulations, directives and conditions have been complied with and also ensure that use is only for the intended purpose and the safety requirements have been fulfilled.After connection to other circuits the sensor may no longer be used in Exi installations. When interconnected to (associated) electrical equipment, it is required to perform the "Proof of intrinsic safety" (EN60079-14).

Installation and mounting instructions

Avoid static charging of cables and plastic devices. Please only clean the device with a damp cloth. Do not install the device in a dust flow and avoid build-up of dust deposits on the device.If the devices and the cable could be subject to mechanical damage, they must be protected accordingly. They must also be shielded against strong electro-magnetic fields.The pin configuration and the electrical specifications can be taken from the device marking or the technical data sheet.In order to avoid contamination of the device, please remove possible blanking plugs of the cable glands or connectors only shortly before inserting the cable or opening the cable socket.

Special conditions for safe operation

The device must be protected against any kind of mechanical damage.

Service/Maintenance

Repairs are not possible. The approval expires if the device is repaired or modified by a person other than the manufacturer.
The most important data from the approval are listed.

FMX-IM-3UR38X| 22-08-2024 08-00 | Technical modifications reserved